478RO AND 478LO ELECTRIC STRIKE

TRINE ACCESS TECHNOLOGY
1440 Ferris Place • Bronx • New York • 10461-3699
Telephone Number: (718) 829-2332
Fax Number: (718) 829-6405
Email: CustomerService@TrineOnline.com
Website: www.TrineOnline.com

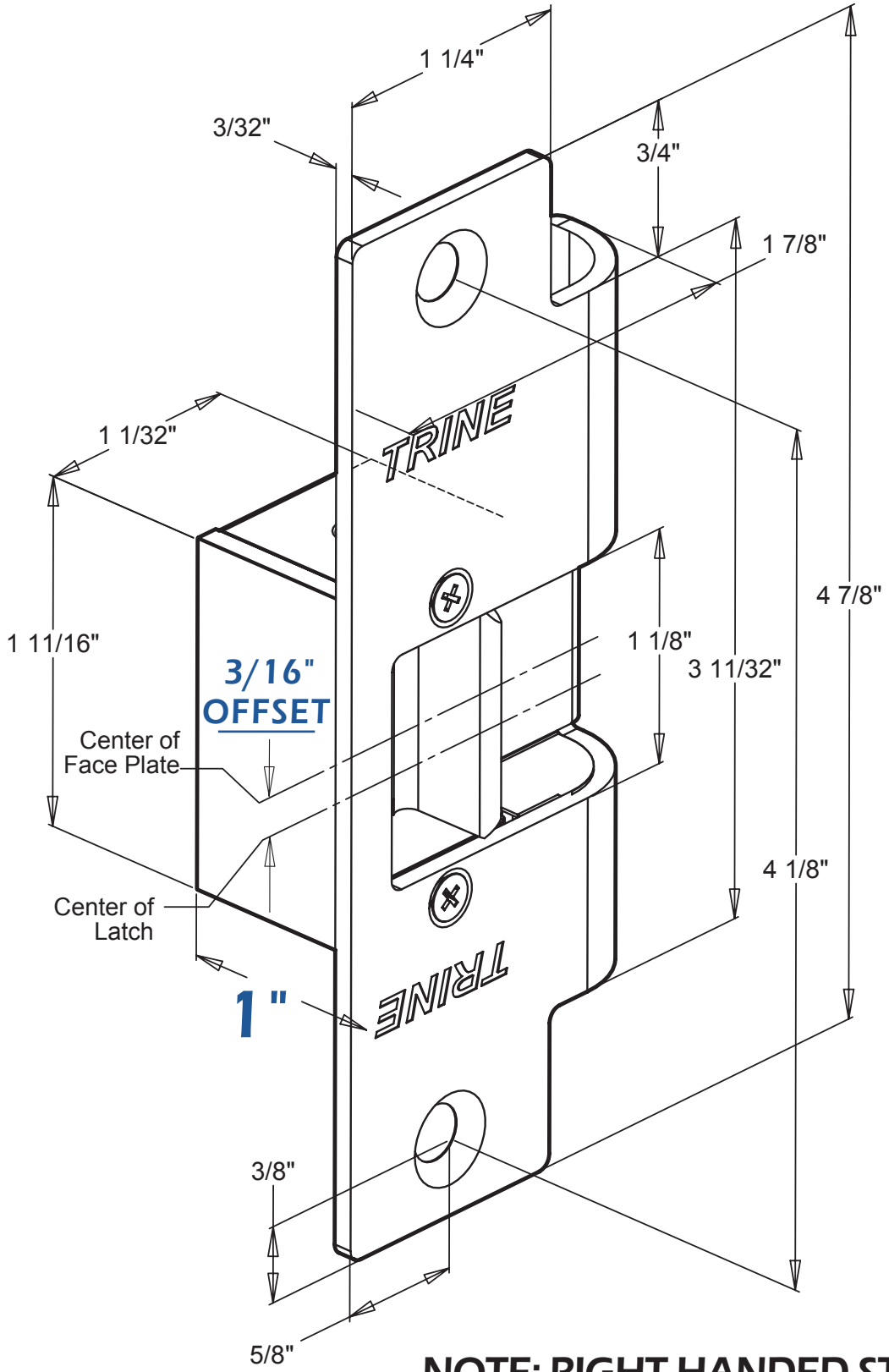

NOTE: RIGHT HANDED STRIKE SHOWN (RO)

ACTS AS A 'DROP PLATE' FOR DOOR SAG WITH THE 478 FACEPLATE